A TECHNICAL PRESENTATION

BH100 Service Training

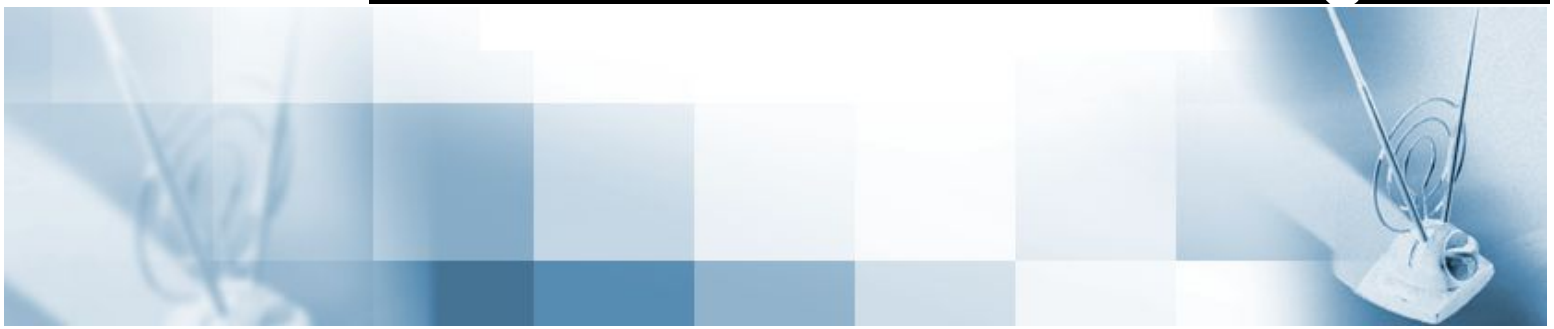

2007. 10.29

Video R&D 3 Group

1. Disc Capacity

Capacity

Blu-ray : 25GB (DL 50GB)
HD DVD : 15GB (DL 30GB)

DVD ROM ™ DVD RAM ™ DVD RW ™ RW DVD+ReWritable

DVD-ROM, -R, +R, +RW, -RW, RAM : 4.7GB

CD-DA, ROM

CD-R, RW : 650MB

Year

’82 ~ ’94 ’97 ’98 ’99 ’01 ’06 ’07~

2. BD/HD Background

 Based on high density recording technology, Optical Storage Product has been developing to support playing/recording HD contents

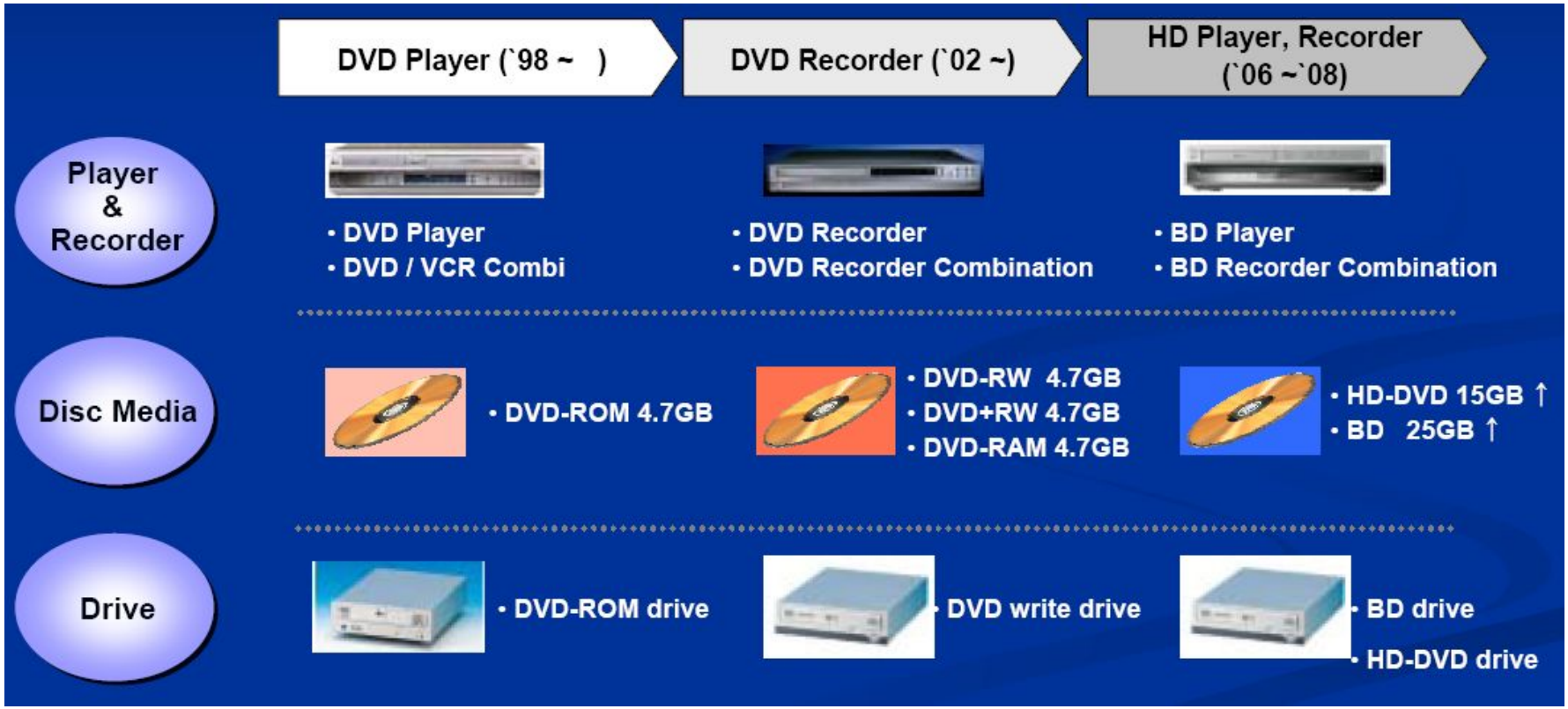

3. Concept

Concept Image

“ User Friendly HD Contents! ”

▸ **World First**
HD Dual Format Play

▸ **User Recognition**
UI/GUI

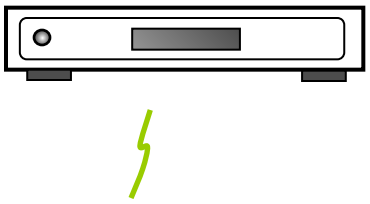

▸ **Movie Title Rental Service**

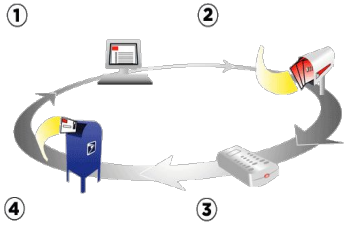

Playable Discs

BD-ROM
Discs such as movies that can be purchased or rented

HD DVD Disc
This product fully supports standard Blu-ray discs and can play high definition audio/visual content from HD DVD discs. This product does not support interactive “iHD” features available from many HD DVD discs.

DVD-VIDEO (8 cm / 12 cm disc)
Discs such as movies that can be purchased or rented

DVD-R (8 cm / 12 cm disc)
Video mode and finalized only

DVD-RW (8 cm / 12 cm disc)
Video mode and finalized only

DVD+R
Video mode only
Supports the dual layer disc also

DVD+RW
Video mode only

4. Specifications

• GENERAL

Power requirements :	AC 120V, 60Hz
Power consumption :	30W
Dimensions (W x H x D) :	Approx. 430 x 78 x 250 mm (17 x 3.1 x 9.9 inches) without foot
Weight (Approx.) :	4.1kg (9.1 lbs)
Operating temperature :	5°C to 35°C (41°F to 95°F)
Operating humidity :	5% to 90%

• OUTPUTS

VIDEO OUT :	1.0V (p-p), 75Ω, sync negative, RCA jack x 1
COMPONENT VIDEO OUT :	(Y) 1.0V (p-p), 75Ω,negative sync, RCA jack x 1
	(Pb)/(Pr) 0.7V (p-p), 75Ω, RCA jack x 2
HDMI OUT (video/audio) :	19pin (HDMI standard, Type A)
ANALOG AUDIO OUT :	2CH : 2.0Vrms (1kHz, 0dB), 600Ω, RCA jack (L, R) x 1
	6CH : 2.0Vrms (1kHz, 0dB), 600Ω, RCA jack x 6
DIGITAL OUT (COAXIAL) :	0.5V (p-p), 75Ω, RCA jack x 1
DIGITAL OUT (OPTICAL) :	3V (p-p), 75Ω, Optical jack x 1

• SYSTEM

Laser :	Semiconductor laser, wavelength : 405nm/650nm/780nm
Signal system :	Standard NTSC Color TV system
Frequency response :	8Hz to 44kHz (96 kHz Sampling)
	8Hz to 22kHz (48 kHz Sampling)
Signal-to-noise ratio :	More than 100dB (ANALOG OUT connectors only)
Harmonic distortion :	Less than 0.008%
Dynamic range :	More than 95dB
Accessories :	Video cable (1), Audio cable (1), Remote control (1), Batteries (2)

Note : Design and specifications are subject to change prior notice.

Proposed BD RPC Map

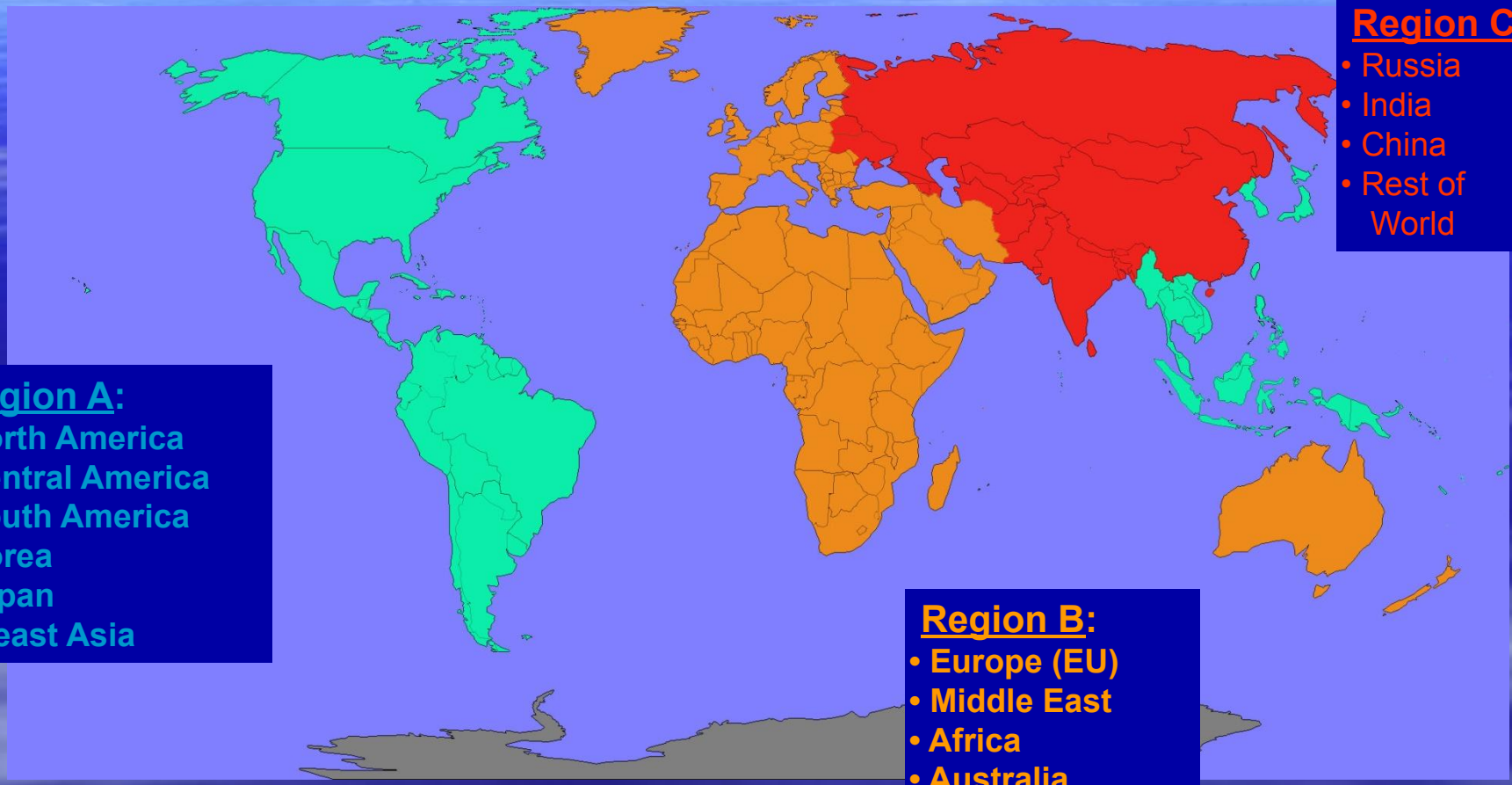

Region A:
- North America
- Central America
- South America
- Korea
- Japan
- S'east Asia

Region B:
- Europe (EU)
- Middle East
- Africa
- Australia
- New Zealand

Region C:
- Russia
- India
- China
- Rest of World

5.Front Panel

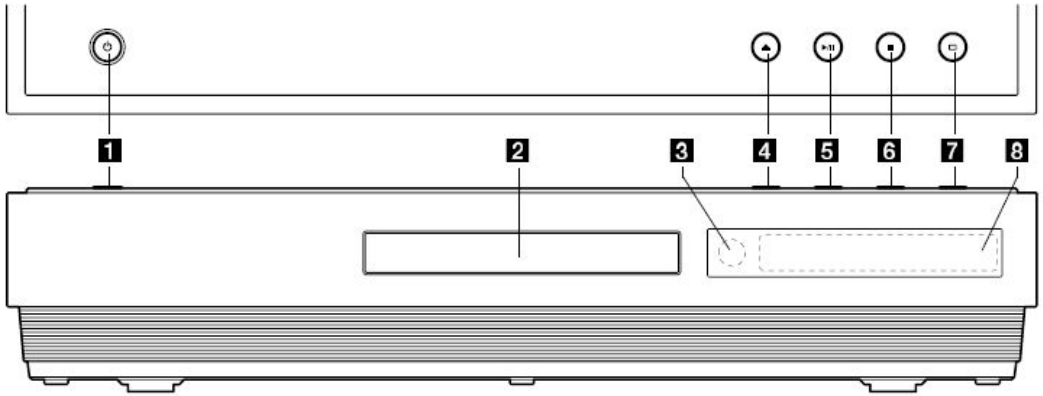

1 POWER Button
Switches the unit ON or OFF.

2 Disc Tray
Insert a disc here.

3 Remote Sensor
Point the Remote Control here.

4 ⏏ (OPEN/CLOSE)
Opens or closes the disc tray.

5 ► / ❚❚ (PLAY / PAUSE)
Starts playback.
Pause playback temporarily, press again to exit pause mode.

6 ■ (STOP)
Stops playback.

7 ▭ (RESOLUTION)
Sets the output resolution for HDMI and COMPONENT VIDEO OUT jacks.

8 Display Window
Shows the current status of the player.

Tip:
⏏, ► / ❚❚ , ■, and ▭ buttons are operated with a slight/brief touch.

Precautions in using the touch buttons

- Use the touch buttons with clean and dry hands.
- Do not press the touch buttons with too much force.
- Do not touch the button with any conductive material such as metallic object (Disc, etc). It may cause a malfunction.

Lock (Child Lock)

The ► / ❚❚ , ■, and ▭ buttons on the front of the player can be locked so that your player can only be operated using the Remote Control.

1. Press LOCK on the Remote Control. “LOCK ON” will appear in the display window.
   If ► / ❚❚ , ■ or ▭ button on the front of your unit is pressed, “CHILD LOCK” will flicker in the display window for a few seconds.
2. Press LOCK again to switch off the child lock. “LOCK OFF” will disappear in the display window.

6. VFD

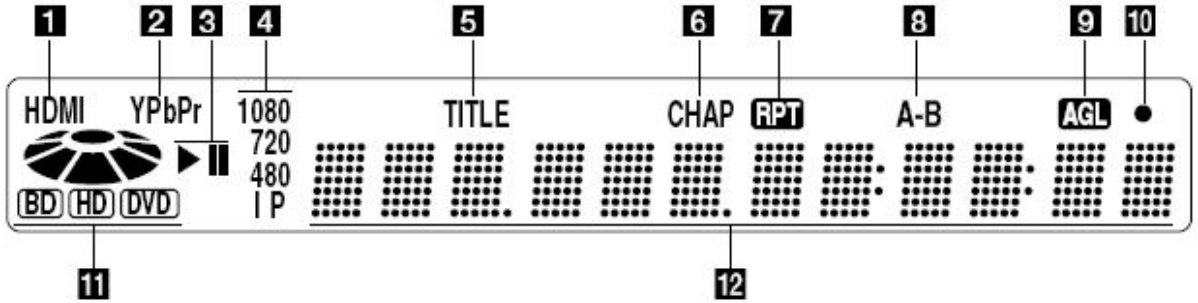

1 HDMI Indicator
Indicates when the HDMI output is available.

2 YPbPr Indicator
Indicates when the component video output is available.

3 Status Indicator
►: Playing
❚❚: Paused

4 Video Output Resolution Indicator
Displays the video output resolution currently selected.
480i: 480 interlace
480p: 480 progressive
720p: 720 progressive
1080i: 1080 interlace
1080p: 1080 progressive

5 TITLE
Indicates current title number.

6 CHAP (Chapter) Indicator
Indicates current chapter number.

7 Repeat Mode Indicator
Indicates when playing in repeat mode.

8 A-B Repeat Mode Indicator
Indicates when playing in A-B repeat mode.

9 AGL (Angle) Indicator
Indicates when playing a scene recorded with multi angles.

10 Remote Control Indicator
Indicates when Remote Control signal is received.

11 Disc Indicator
BD: Indicates when an BD-ROM disc is loaded.
HD DVD: Indicates when an HD DVD disc is loaded.
DVD: Illuminates when a DVD disc is loaded.

12 Character Indicators
Indicates total playing time, elapsed time, title number, chapter number or message, etc.

7.Back/Panel

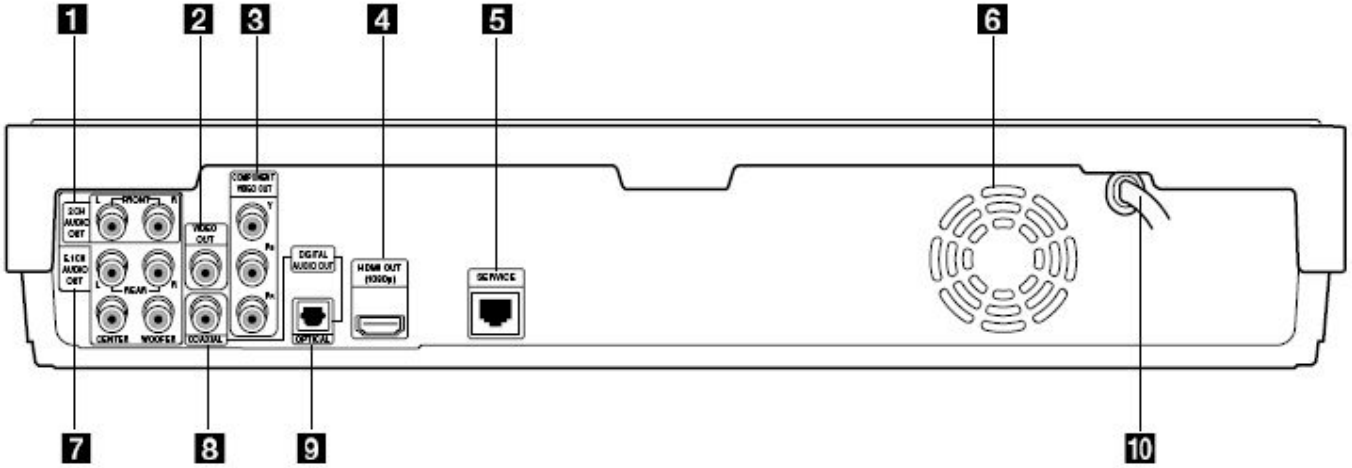

1 2CH AUDIO OUT (Left/Right)
Connect to a TV with 2 channel audio inputs.

2 VIDEO OUT
Connect to a TV with video inputs.

3 COMPONENT VIDEO OUT (Y Pb Pr)
Connect to a TV with Y Pb Pr inputs.

4 HDMI OUT (Type A)
Connect to TV with HDMI inputs. (Interface for digital audio and video)

5 SERVICE port
Reserved for authorized service purposes.

6 Cooling fan

7 5.1CH ANALOG AUDIO OUT
Connect to a 5.1CH analog input on an A/V Amplifier/Receiver.

8 COAXIAL (Digital audio out jack)
Connect to digital (coaxial) audio equipment.

9 OPTICAL (Digital audio out jack)
Connect to digital (optical) audio equipment.

10 AC Power Cord
Plug into the power source.

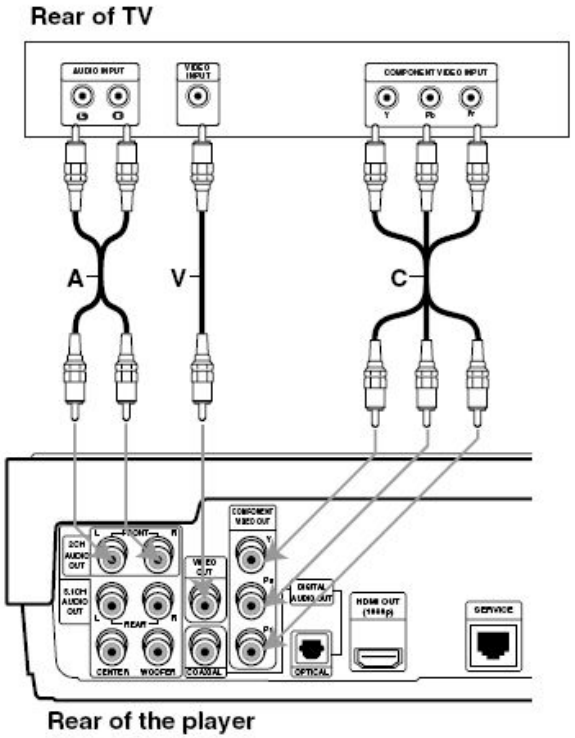

Fig 1. Connections to your TV

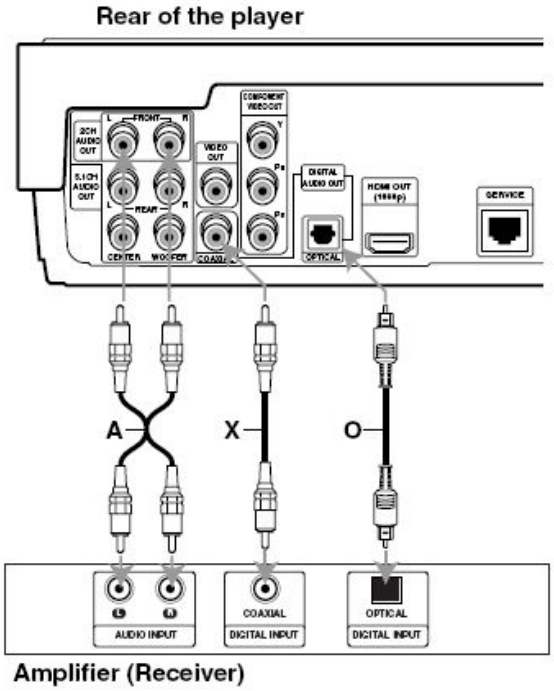

Fig 2. Connecting to an amplifier equipped with two channel analog stereo or Dolby Pro Logic II/ Pro Logic

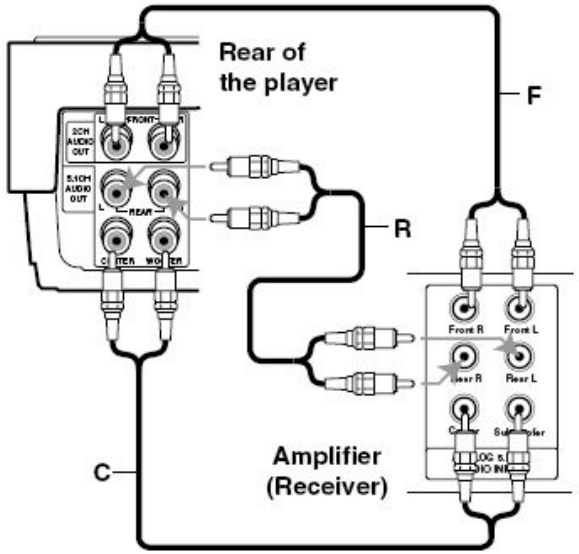

Fig 3. Analog connection to a multi-channel A/V receiver with 6 channel connectors (Dolby Digital, DTS)

9. Resolution Setting

✔ How to change the resolution using RESOLUTION button (Fig 1)

✔ How to change the resolution using Setup Menu (Fig 2)

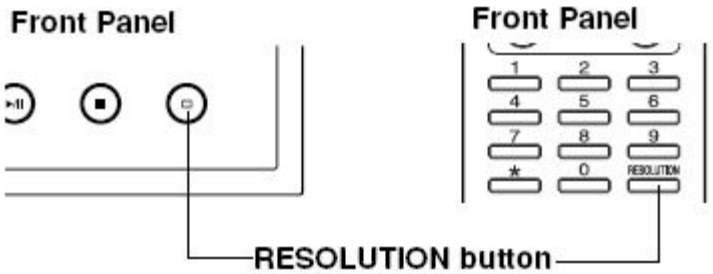

Fig 1. Resolution button

Fig 2. Setup Menu

✔ A kind of the Resolution

- 1080P – Outputs 1080 lines of progressive video.
  (only for HDMI connection and BD-ROM/HD DVD discs recorded in 1080p)
- 1080I – Outputs 1080 lines of interlaced video.
- 720 P – Outputs 720 lines of progressive video.
- 480 P – Outputs 480 lines progressive video.
- 480 I – Outputs 480 lines of interlaced video.
  (COMPONENT and VIDEO OUT jack only)

10. Resolution Check

1. Initial Screen When the unit connect to TV using HDMI cable (Set TV input to HDMI mode)

2. Press button 2,4,8,6,5 on the remote control When you see on the screen showing No disc.

10. Resolution check

3. Press button 3

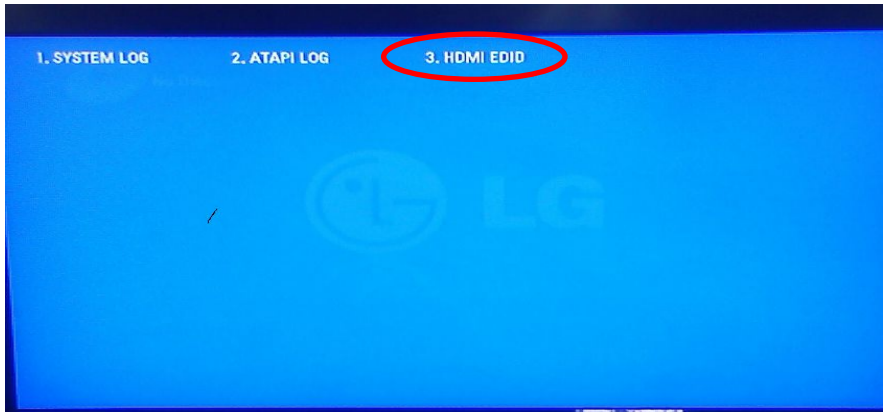

4. TV screen shows TV HDMI resolution (EDID).

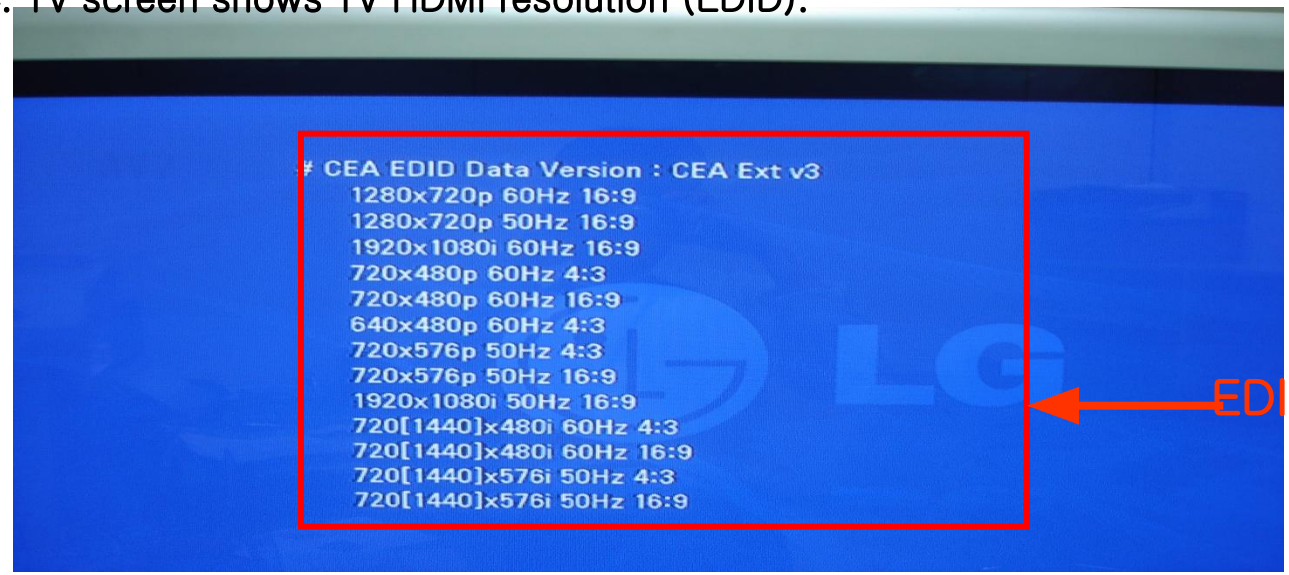

5.Press RETURN twice on the remote control if you want to finish.

1. System Block Diagram
2. Overall Wiring Block Diagram
3. Main Signal Path
4. Audio Signal Path
5. Front Block Diagrma
6. SMPS
7. SMPS
8. Component Position

2. Block Diagram

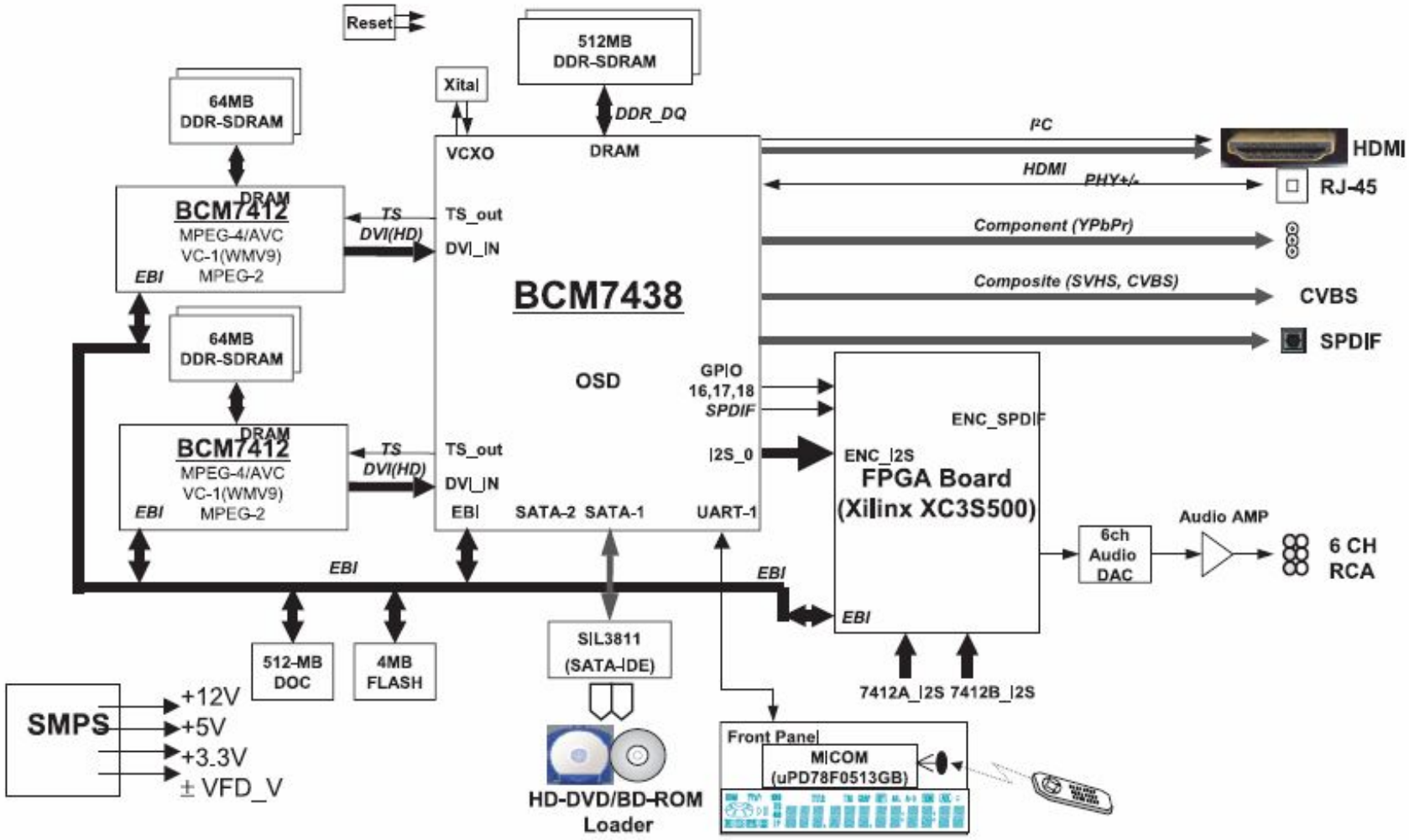

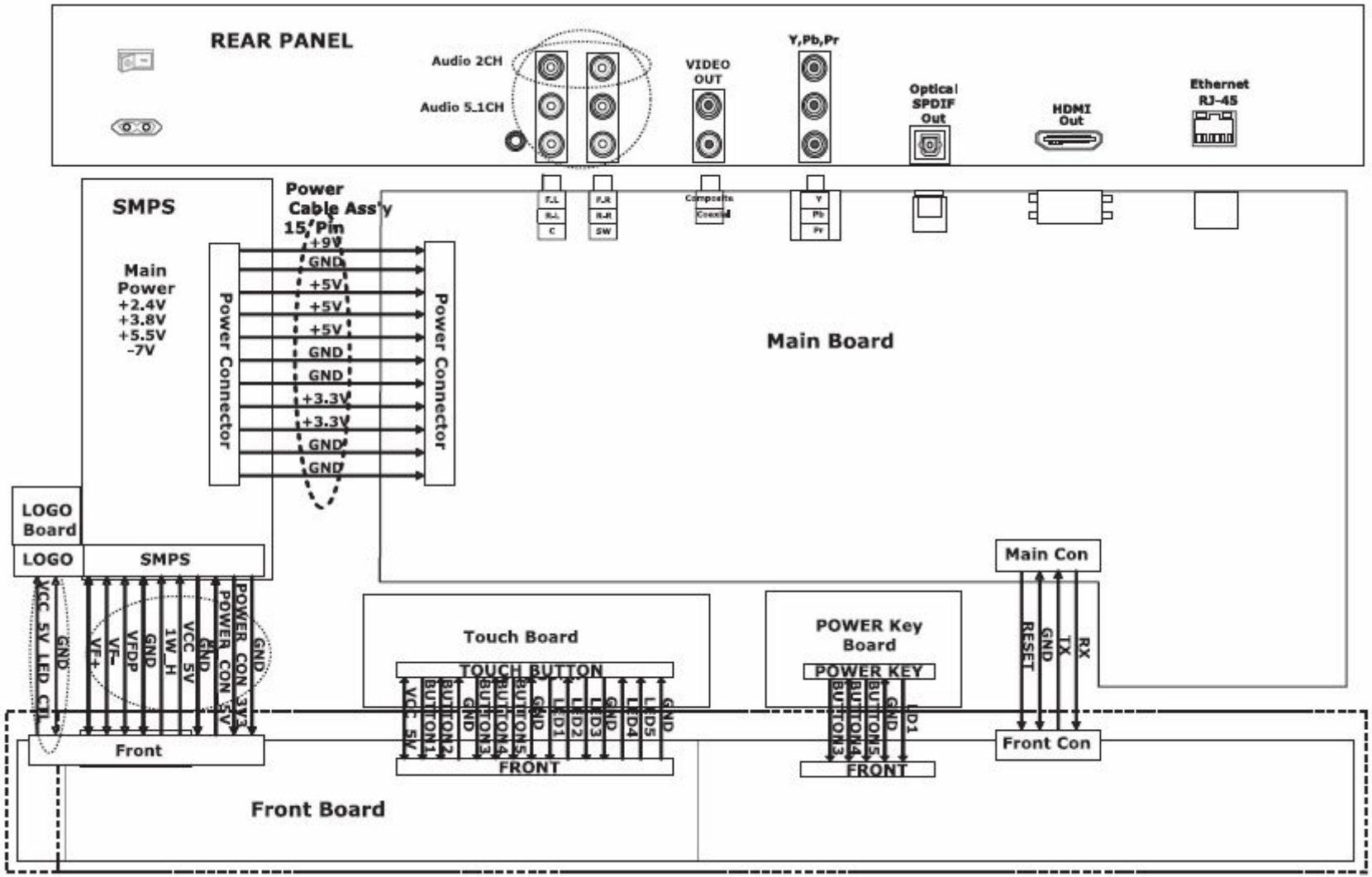
REAR PANEL
Audio 2CH
Audio 5.1CH
VIDEO OUT
Y,Pb,Pr
Optical SPDIF Out
HDMI Out
Ethernet RJ-45
SMPS
Power Cable Ass'y
15 Pin
Main Power
+2.4V
+3.8V
+5.5V
-7V
Power Connector
Power Connector
+9V
GND
+5V
+5V
+5V
GND
GND
+3.3V
+3.3V
GND
GND
Main Board
LOGO Board
LOGO
SMPS
Main Con
Touch Board
TOUCH BUTTON
FRONT
POWER Key Board
POWER KEY
FRONT
Front Con
Front
Front Board
VCC_5V_LED_CTL
GND
VF+
VF-
VFDP
GND
1W_H
VCC_5V
GND
POWER_CON_5V
POWER_CON_3V3
GND
VCC_5V
BUTTON1
BUTTON2
GND
BUTTON3
BUTTON4
BUTTON5
GND
LED1
LED2
LED3
GND
LED4
LED5
GND
BUTTON3
BUTTON4
BUTTON5
GND
LED1
RESET
GND
TX
RX

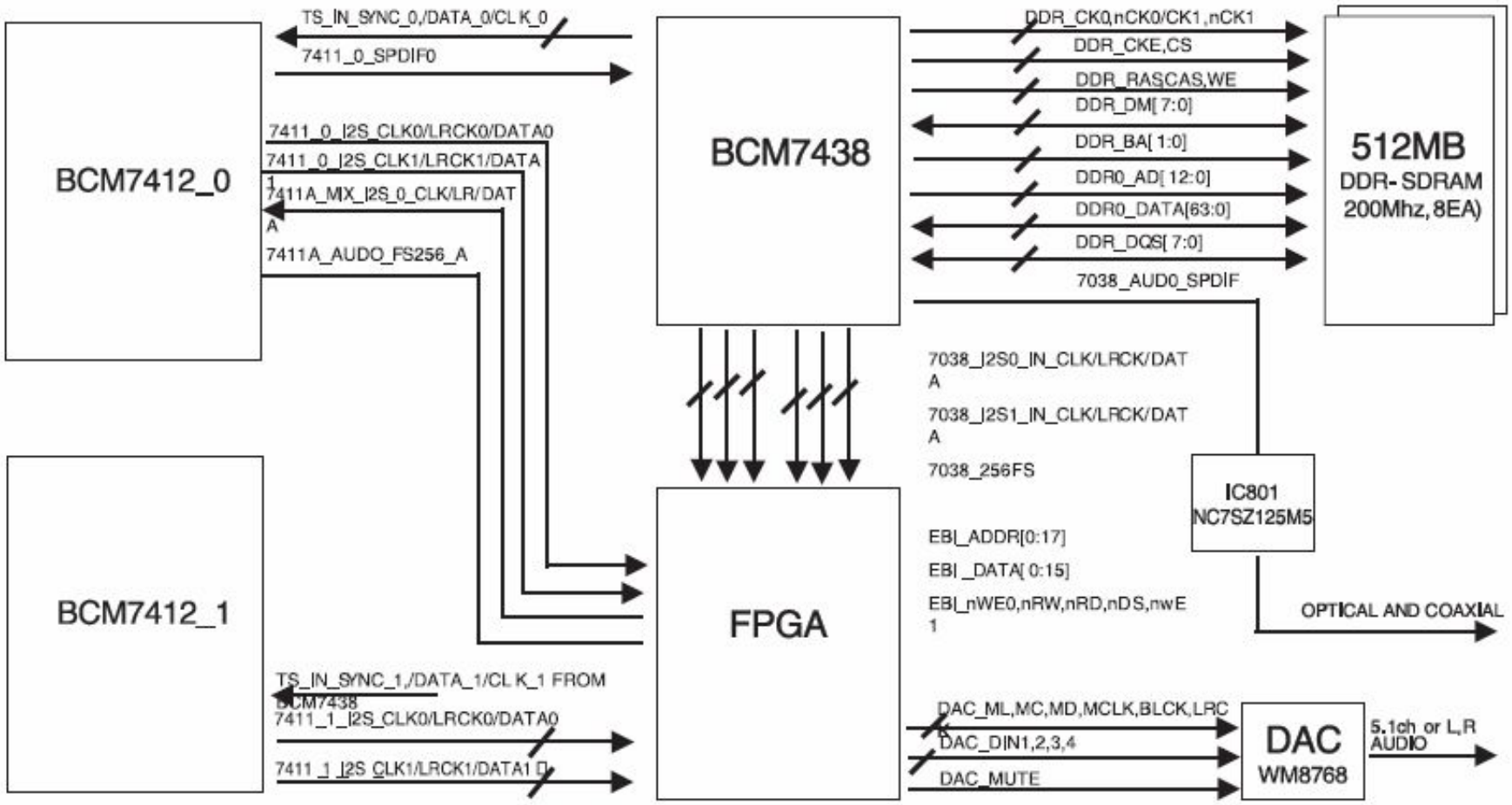
BCM7412_0
BCM7412_1
BCM7438
FPGA
512MB
DDR- SDRAM
200Mhz, 8EA)
IC801
NC7SZ125M5
DAC
WM8768
TS_IN_SYNC_0,/DATA_0/CLK_0
7411_0_SPDIF0
7411_0_I2S_CLK0/LRCK0/DATA0
7411_0_I2S_CLK1/LRCK1/DATA1
7411A_MIX_I2S_0_CLK/LR/DATA
7411A_AUDO_FS256_A
TS_IN_SYNC_1,/DATA_1/CLK_1 FROM BCM7438
7411_1_I2S_CLK0/LRCK0/DATA0
7411_1_I2S_CLK1/LRCK1/DATA1
DDR_CK0,nCK0/CK1,nCK1
DDR_CKE,CS
DDR_RASCAS,WE
DDR_DM[7:0]
DDR_BA[1:0]
DDR0_AD[12:0]
DDR0_DATA[63:0]
DDR_DQS[7:0]
7038_AUD0_SPDIF
7038_I2S0_IN_CLK/LRCK/DATA
7038_I2S1_IN_CLK/LRCK/DATA
7038_256FS
EBI_ADDR[0:17]
EBI _DATA[0:15]
EBI_nWE0,nRW,nRD,nDS,nwE1
OPTICAL AND COAXIAL
DAC_MI,MC,MD,MCLK,BLCK,LRCK
DAC_DIN1,2,3,4
DAC_MUTE
5.1ch or L,R AUDIO

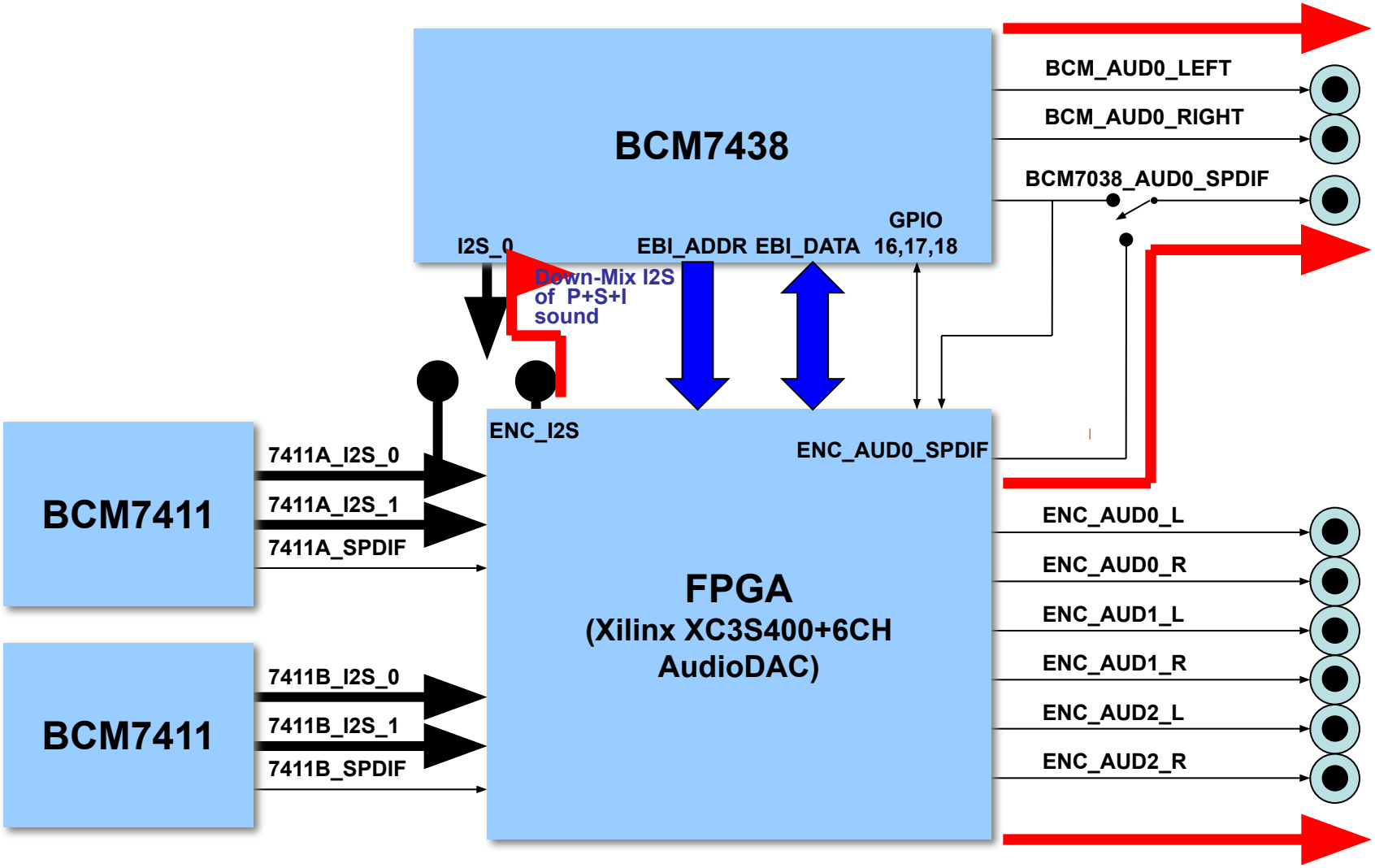
BCM7438
I2S_0
EBI_ADDR EBI_DATA
GPIO 16,17,18
Down-Mix I2S of P+S+I sound
BCM_AUD0_LEFT
BCM_AUD0_RIGHT
BCM7038_AUD0_SPDIF
BCM7411
7411A_I2S_0
7411A_I2S_1
7411A_SPDIF
BCM7411
7411B_I2S_0
7411B_I2S_1
7411B_SPDIF
ENC_I2S
ENC_AUD0_SPDIF
FPGA
(Xilinx XC3S400+6CH AudioDAC)
ENC_AUD0_L
ENC_AUD0_R
ENC_AUD1_L
ENC_AUD1_R
ENC_AUD2_L
ENC_AUD2_R

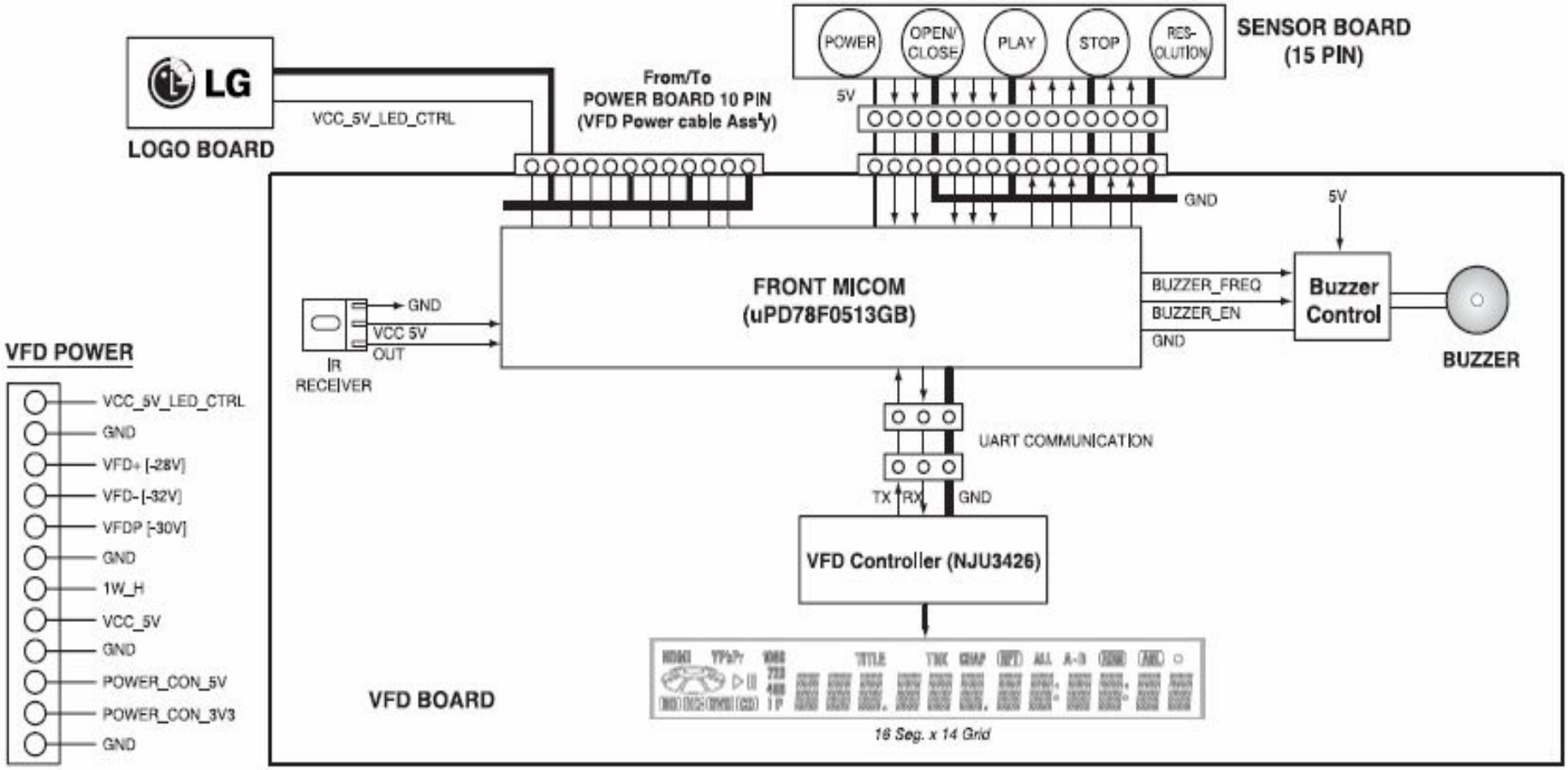
LG
LOGO BOARD
VCC_5V_LED_CTRL
From/To
POWER BOARD 10 PIN
(VFD Power cable Ass'y)
POWER
OPEN/ CLOSE
PLAY
STOP
RES- OLUTION
SENSOR BOARD
(15 PIN)
5V
GND
5V
FRONT MICOM
(uPD78F0513GB)
BUZZER_FREQ
BUZZER_EN
GND
Buzzer Control
BUZZER
GND
VCC 5V
OUT
IR
RECEIVER
VFD POWER
VCC_5V_LED_CTRL
GND
VFD+ [-28V]
VFD- [-32V]
VFDP [-30V]
GND
1W_H
VCC_5V
GND
POWER_CON_5V
POWER_CON_3V3
GND
UART COMMUNICATION
TX
RX
GND
VFD Controller (NJU3426)
VFD BOARD
18 Seg. x 14 Grid

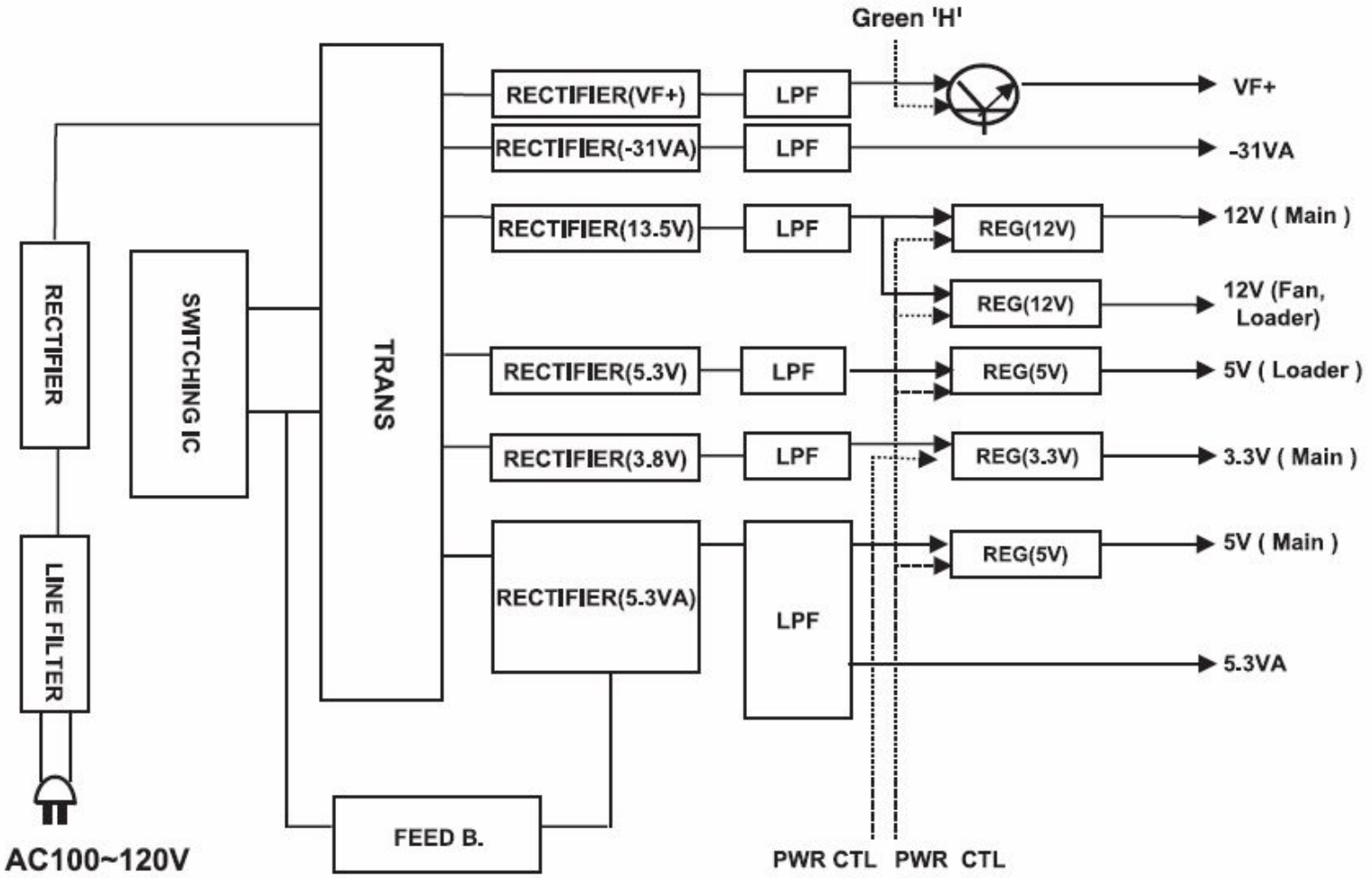
Green 'H'
RECTIFIER
SWITCHING IC
TRANS
LINE FILTER
AC100~120V
FEED B.
RECTIFIER(VF+)
LPF
VF+
RECTIFIER(-31VA)
LPF
-31VA
RECTIFIER(13.5V)
LPF
REG(12V)
12V (Main)
REG(12V)
12V (Fan, Loader)
RECTIFIER(5.3V)
LPF
REG(5V)
5V (Loader)
RECTIFIER(3.8V)
LPF
REG(3.3V)
3.3V (Main)
RECTIFIER(5.3VA)
LPF
REG(5V)
5V (Main)
5.3VA
PWR CTL
PWR CTL

Load Analysis

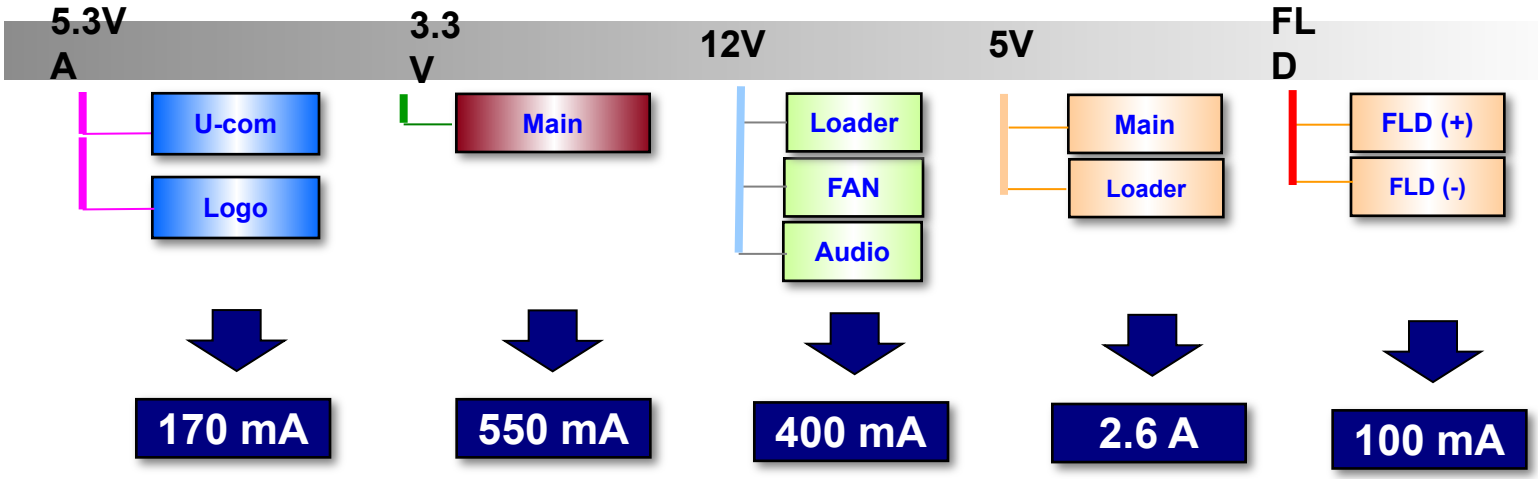

SMPS Power Consumption Analysis

	3.3V	5.3V(Main, VA)	12V(HDD)	5.3(Loader)	FLD(+)~FLD(-)
	550	2600	400	400	100
Diode	D3S6M	B5A60VI	UF5402	SB360	RL104F
Trans	3.8	5.7	14	5.8	3.2
(W)	2.06	14.82	5.6	2.32	0.32

Comp side

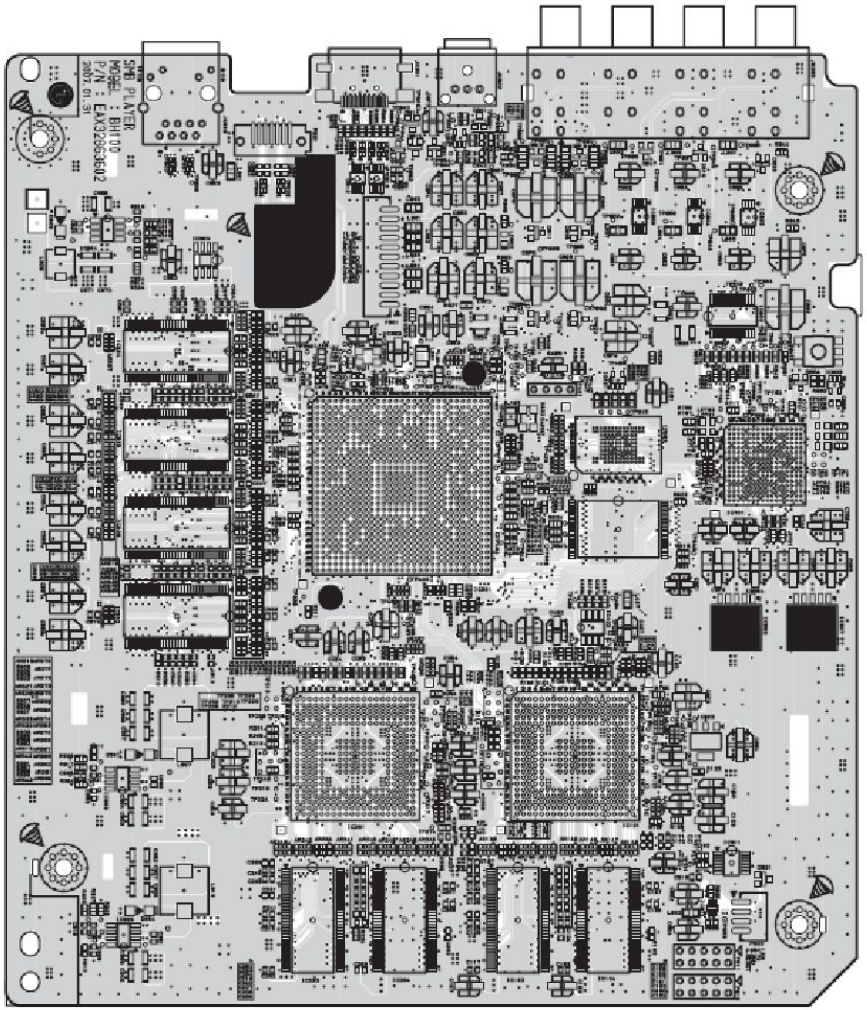

Solder side

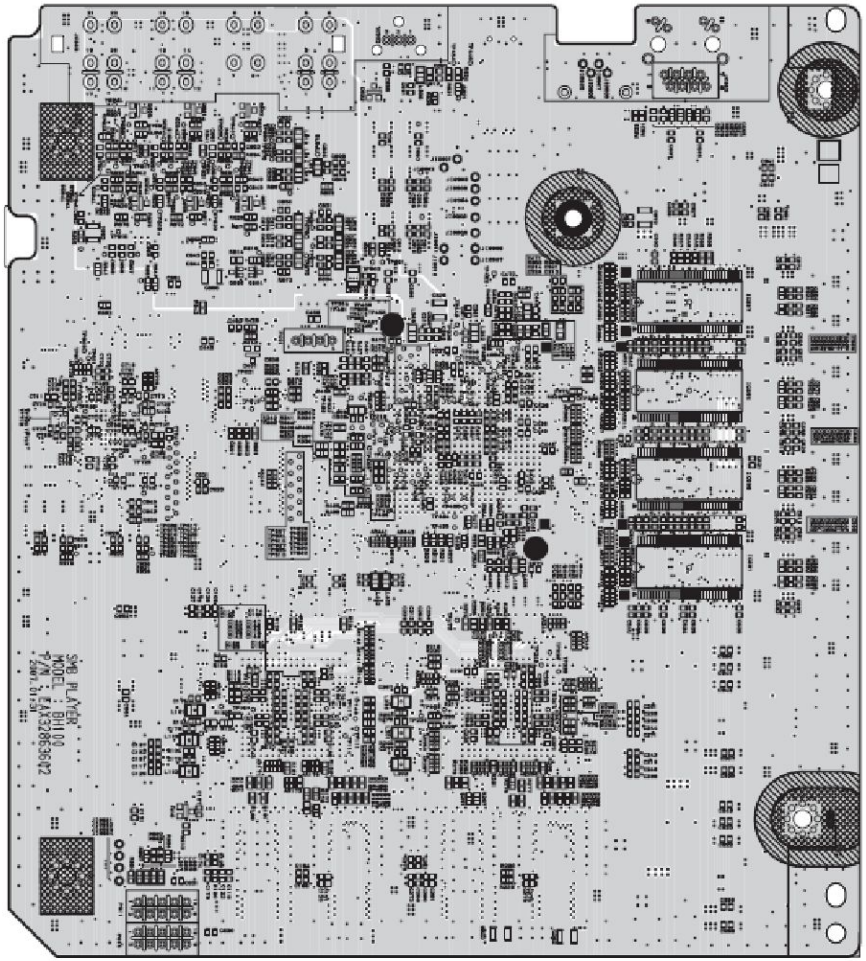

Comp side

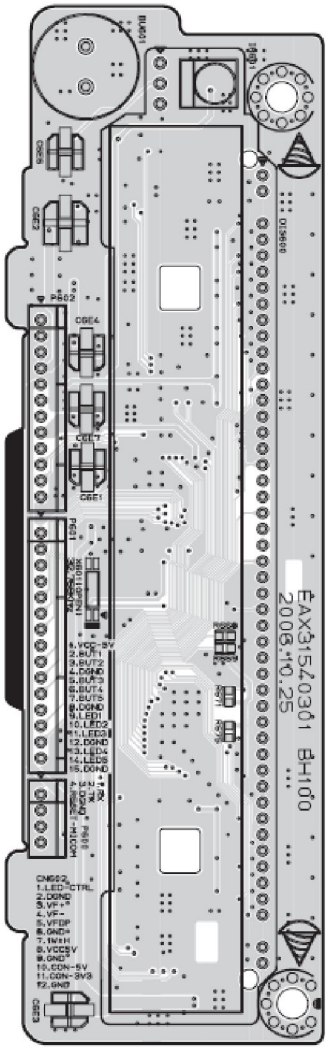

Solder side

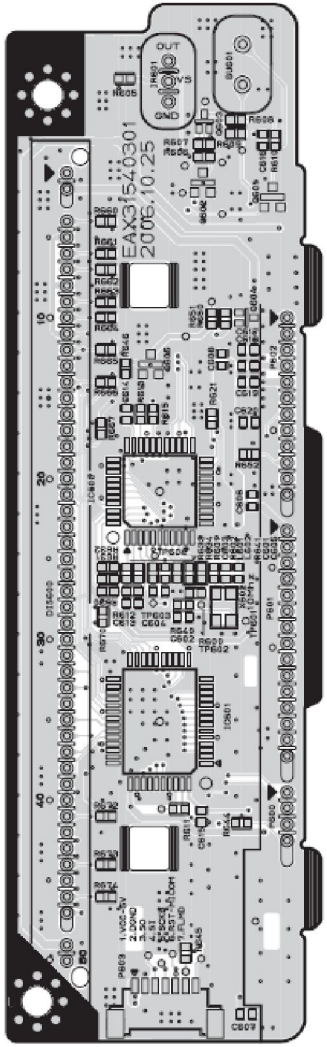

Comp side

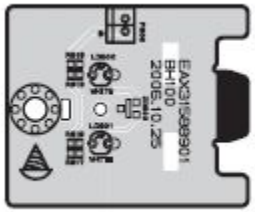

Solder side

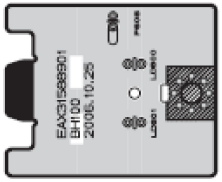

Comp side

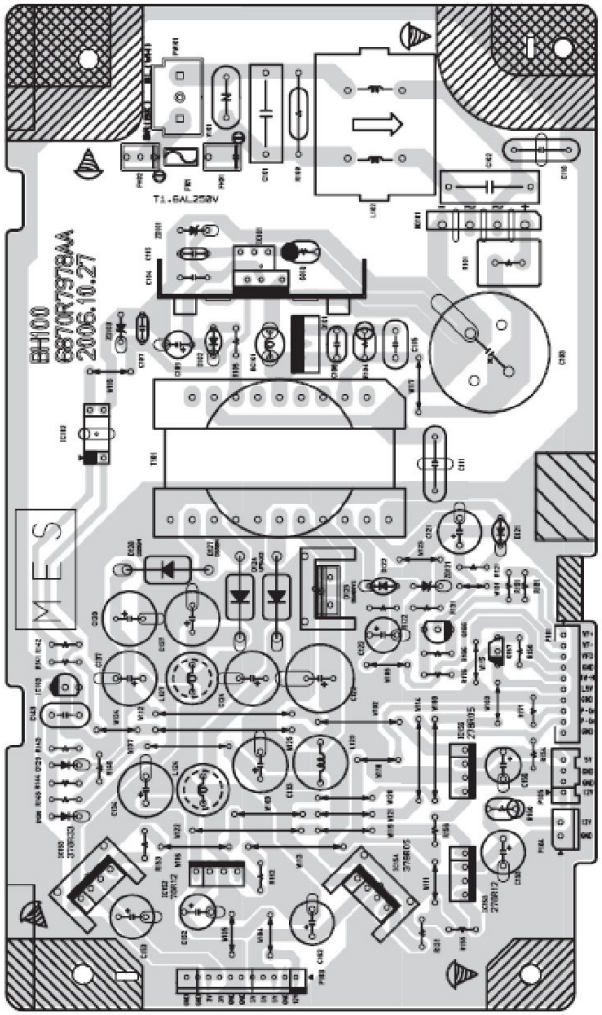

Solder side

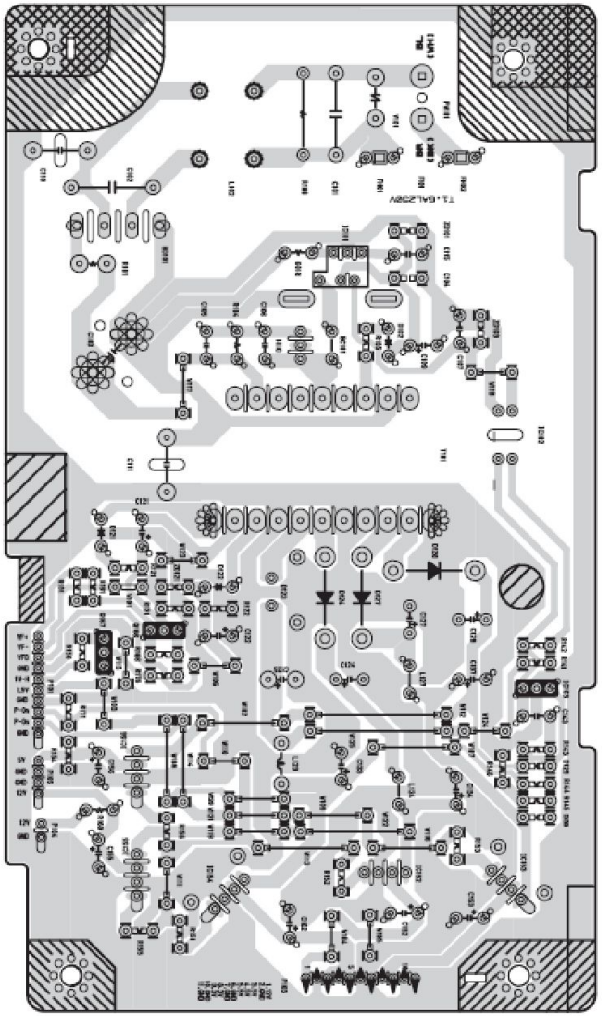

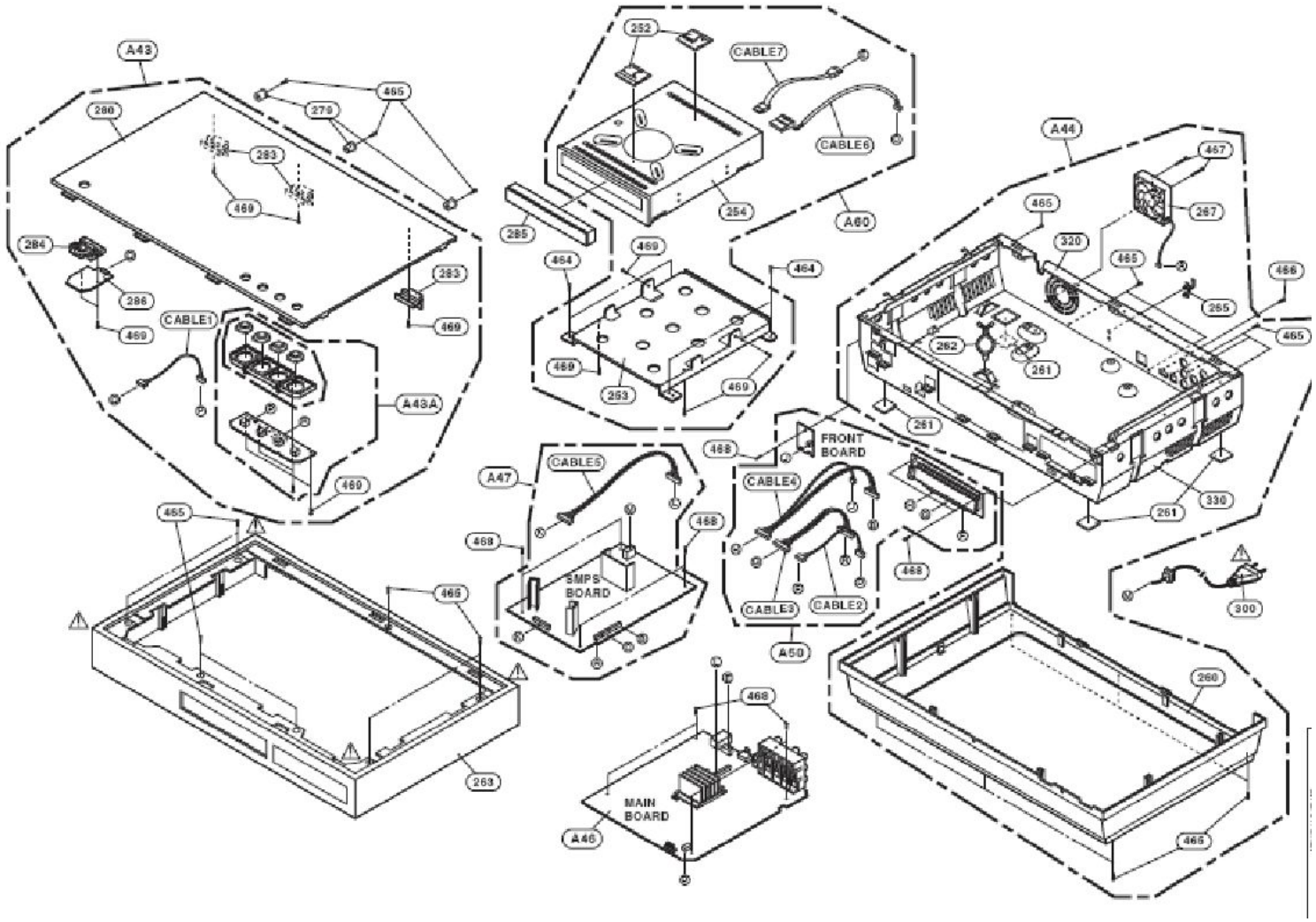
A43
280
279
465
283
469
284
286
CABLE1
A43A
252
CABLE7
CABLE6
254
285
A60
464
253
A44
467
267
320
265
466
262
261
330
FRONT BOARD
468
CABLE4
CABLE5
A47
SMPS BOARD
CABLE3
CABLE2
A50
300
260
MAIN BOARD
A46
263

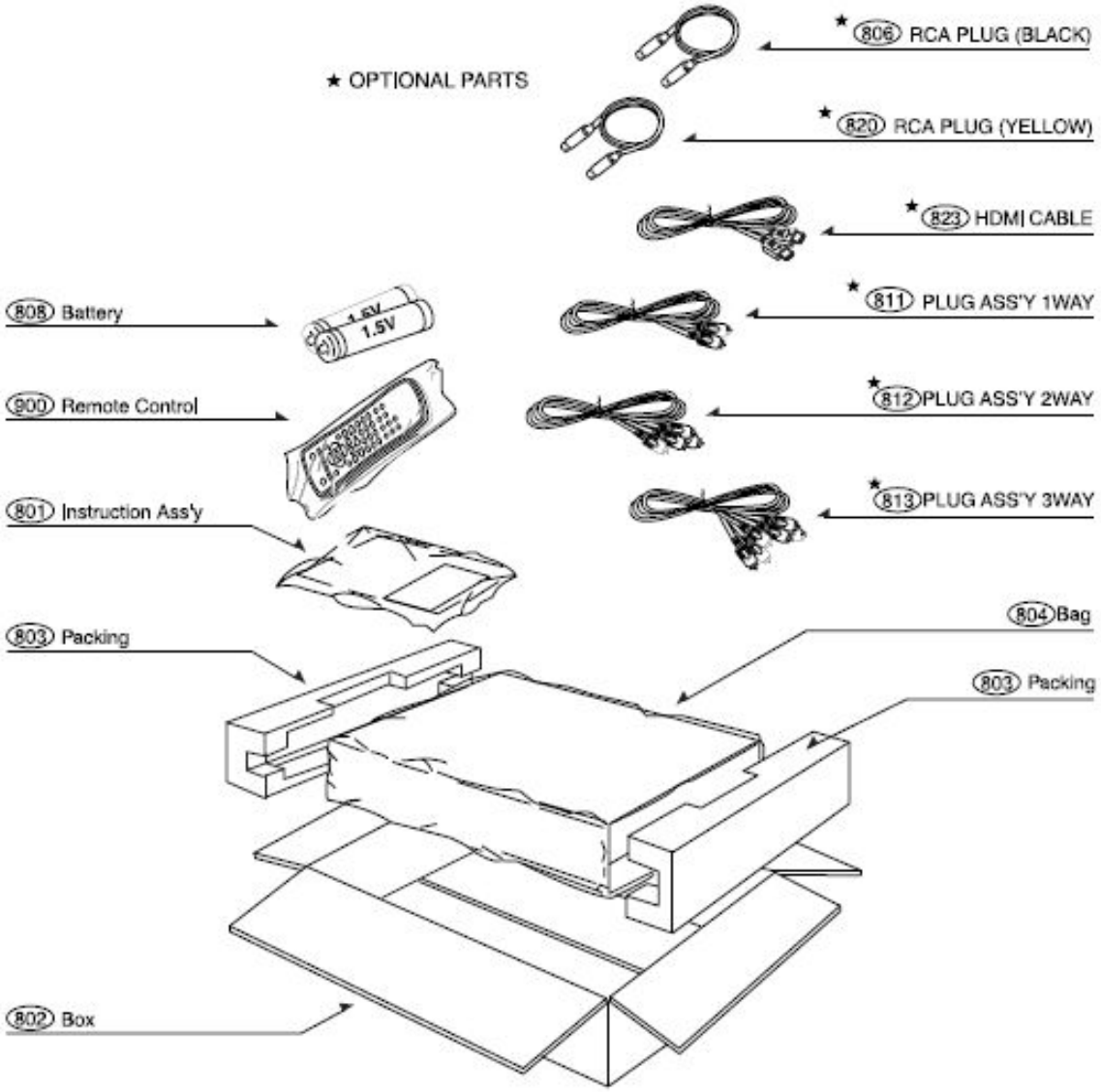
★ OPTIONAL PARTS
★ 806 RCA PLUG (BLACK)
★ 820 RCA PLUG (YELLOW)
★ 823 HDMI CABLE
★ 811 PLUG ASS'Y 1WAY
★ 812 PLUG ASS'Y 2WAY
★ 813 PLUG ASS'Y 3WAY
808 Battery
1.5V
1.5V
900 Remote Control
801 Instruction Ass'y
803 Packing
804 Bag
803 Packing
802 Box

1. Burning Upgrade Disc

1) Use Only DVD Disc for Upgrade DVD recordable Disc (CD Not support.)
2) Burn a DVD recordable disc using UDF Format . (Software : Roxio Easy CD Creator, Nero Burning Rom)
3) After Download, Double Click ???.ISO file and Burn select

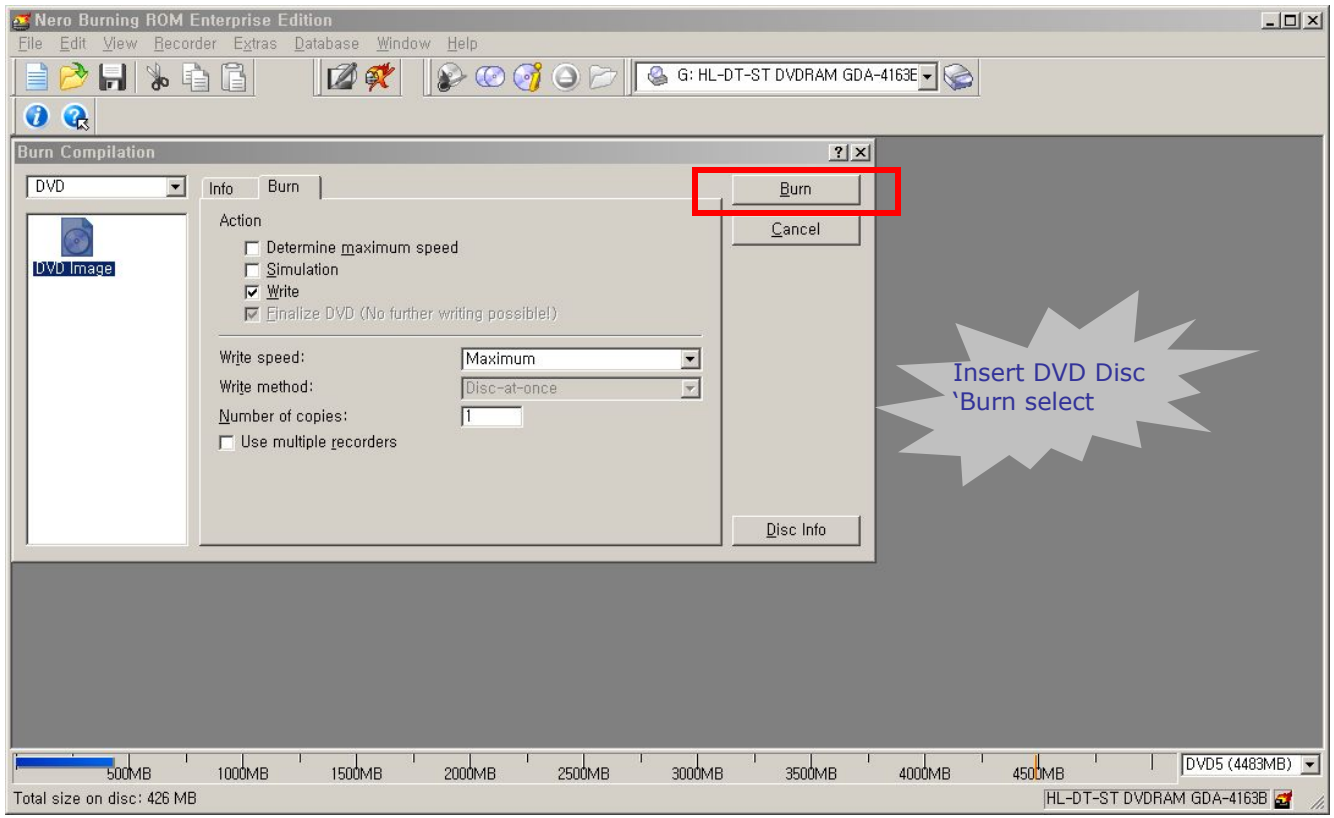

Notice : 5월 이후 생산된 제품은 MPEG Decoder IC (BCM7412)가 1개 삭제되어 프로그램 버전이 두 개로 별도 관리됨.

- Insert a upgrading disc that was burned to UDF format only.
- Show help message for disc upgrade as follows...

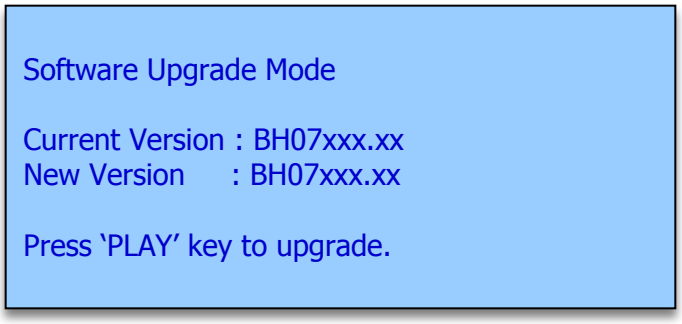

- Press play key to upgrade and it will show progress information
  (Display percent[%] at VFD panel)

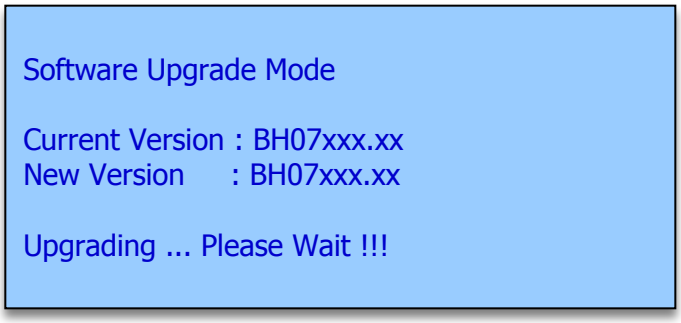

- After completing upgrade then it re-boot by automatically. (2~3 minute)

★ how can check version ?

1. Move cursor setup -> display ->TV aspect -> 16:9 (Fig.1)
2. push 1 3 9 7 1 3 9 ----☐ enter button
3. you can see system information like Fig.2
4. check the Program version & option code
5. Push pause or enter to exit the system information window

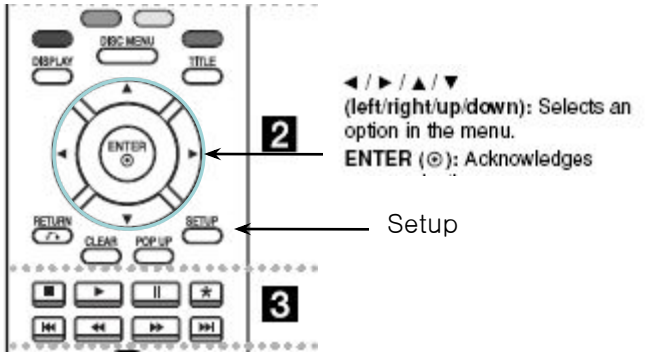

Fig.1 Setup Menu

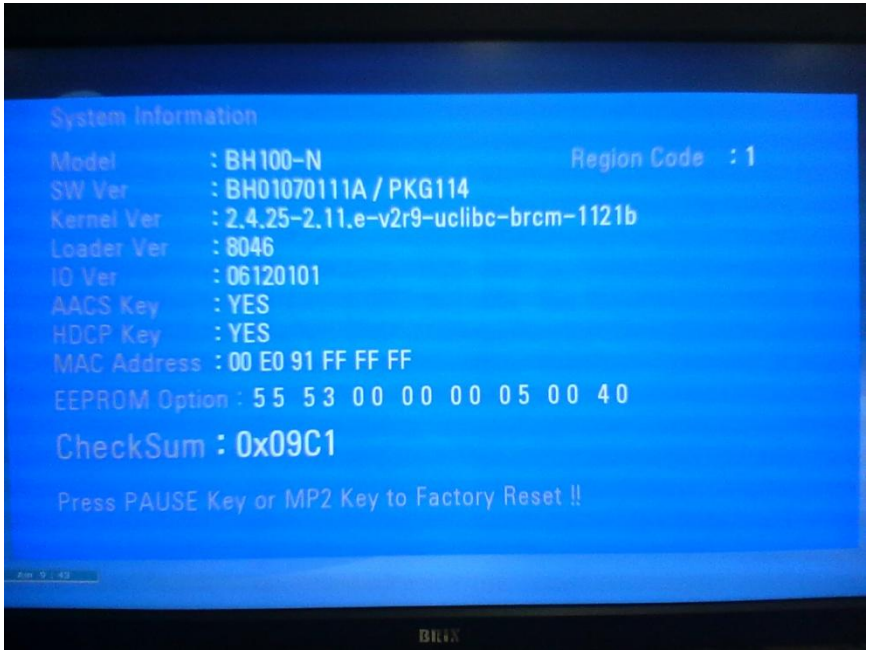

Fig.2 system information window

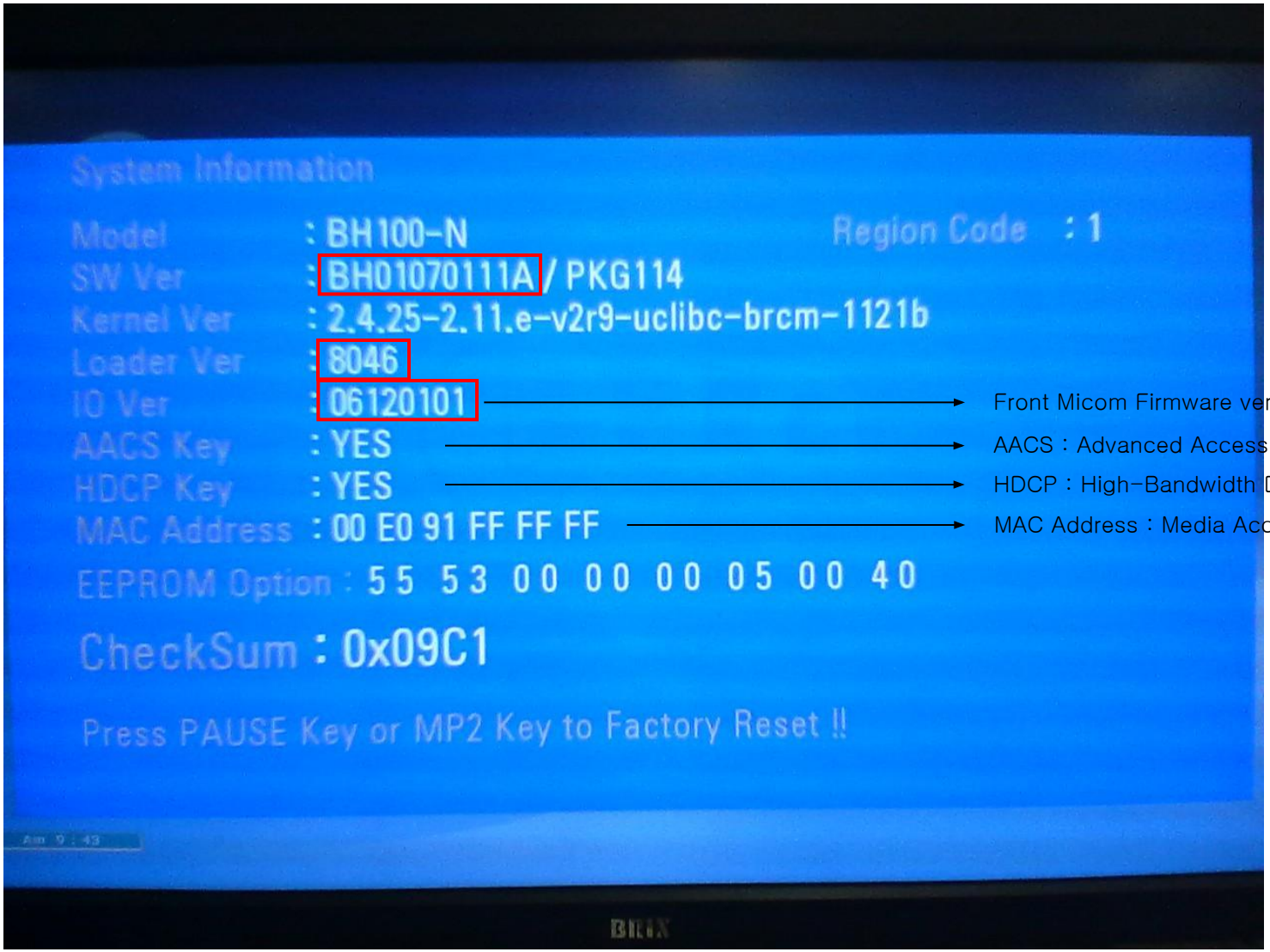

Front Micom Firmware version

AACS : Advanced Access Content System

HDCP : High-Bandwidth Digital Content Protection

MAC Address : Media Access Control Address

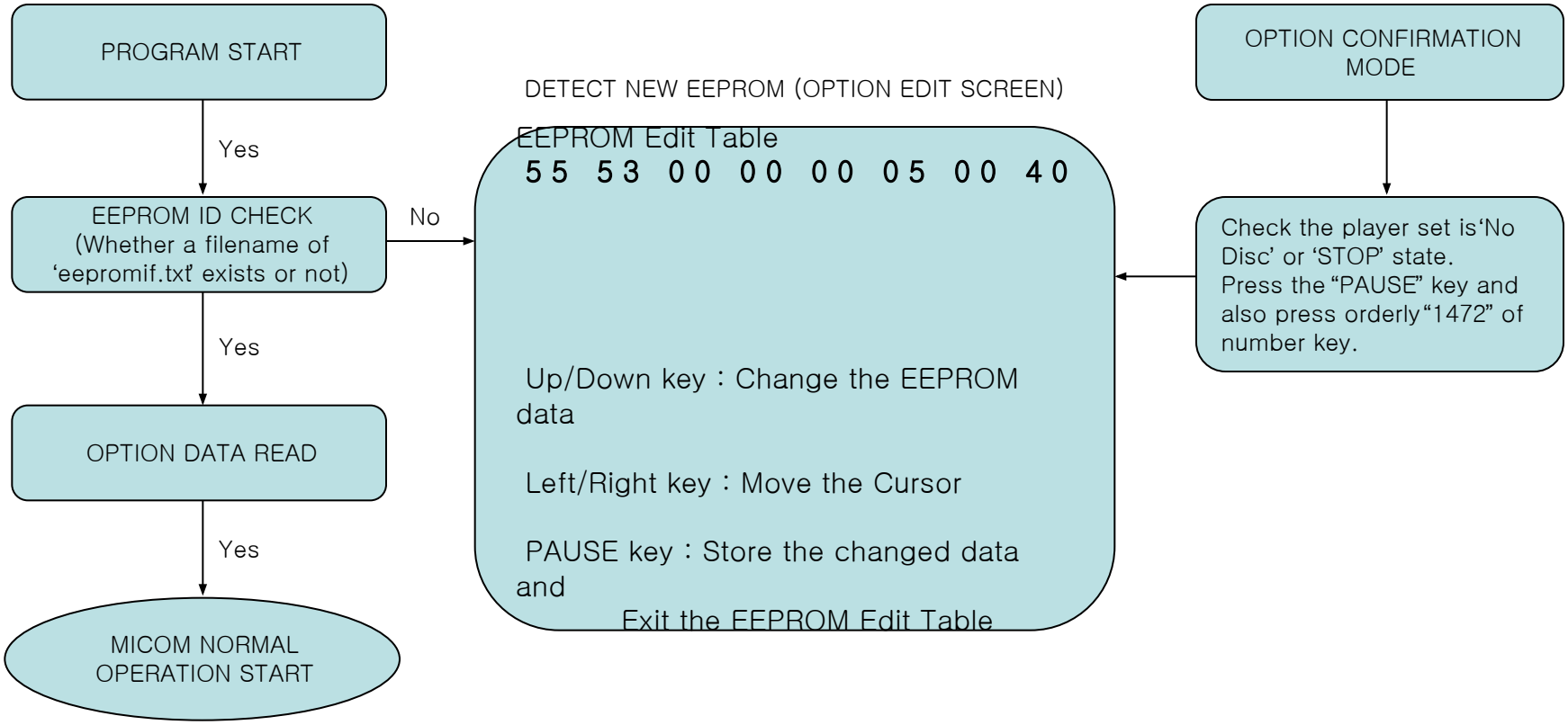

*** EEPROM INITIAL ***

- Check the player set is'No Disc' or 'OPEN' state.

  Move hightlight to SETUP -> Display -> TV Aspect -> 16:9 Wide.

  And press orderly"1397139" + "ENTER" key of remocon.

	1st SMB Player	2nd SMB Player (Additional features)
Signal Format	◆ **NTSC/ATSC** ◆ **Component/Composite output** : 480i, 480p, 720p, 1080i 지원 ◆ **HDMI output (V1.2)** : 480p, 720p, 1080i, 1080p@24및 30Hz 지원	◆ **PAL/DVB** ◆ **Component/Composite output** : 1080p ◆ **HDMI output** : 1080p@60Hz (IC 미대응) □ **3Gen**
Disc & AV Format	◆ **Disc : BD(ROM, Hybrid)**: BD Video **HD-DVD(ROM, Twin)**: HD-DVD Video **DVD (ROM, ±R/RW)**: DVD Video ◆ **Video : MPEG2, MPEG4 AVC, SMPTE VC1** ◆ **Audio : LPCM, DD & DD+, DTS & DTS-HD, TrueHD**	◆ **Disc: BD (-R/RE)**: BD-RE V1.0/V2.0 □ **3Gen** **DVD**: DVD Audio, DVD VR, DVD+RW **CD (ROM, -R/RW)**: CD-DA SACD □ **3Gen** VCD, S-VCD □ **delete**
BD Playback	◆ **HDMV : Play, Trick play, Search, Skip** ◆ **Standard Profile Initial Version (Profile 1.0)** • No Local storage & No Network • Primary Video/Audio	◆ **HDMV : Repeat, Mark** ◆ **Full Profile (Profile 2.0)** • Local storage & Network: Download, VFS, Content Binding • Dual Video/Audio: PIP, Re-encoding of mixed audios
HD-DVD Playback	◆ **AV Title : Play, Trick play, Search/Skip, Repeat, Mark** ◆ **iHD : Pseudo GUI Menu** • No Local storage & No Network • Primary Video/Audio	◆ **iHD : Real iHD function** • Browser-like Navigation • Local storage & Network: Download, Binding • Dual Video/Audio: PIP, Re-encoding of mixed audios
PC Contents	◆ **Not supported**	◆ **JPEG Photo, MP3/WMA Music** ◆ **DivX** □ **3Gen**

Appendix. HD- Title (Hollywood)

HD-DVD (151)
51.5%

Universal Studio(57)

Warner (22)

Genius Productions(5)

Weasel Disc(4)

Brentwood(4)

Ryko Distribution(3)

Image Entertain.(3)

Paramount(2)

Koch Entertainment(1)

BD & HD-DVD(50)
동시 출시 율 20.6%

Warner (32)

Paramount(13)

Weasel Disc(3)

Magnolia Products(1)

RED Distribution (1)

BD (141)
48.5%

Sony Pictures (31)

20th Century Fox (18)

Buena Vista (16)

Lions Gate(11)

Magnolia Products(6)

RED Distribution (4)

Sony Music Video(2)

Weasel Disc(1)

RCA(1)

Paramount(1)

Total:242type/292title(06.12.26)